NEIWPCC
New England Interstate Water Pollution Control Commission

Final Report

NEIWPCC Job Code:	**0323-003**
Project Code:	**2016-030**
Contractor:	**North Hudson Sewerage Authority (NHSA)**
Prepared By:	**Thomas Aloi, Grant Rite Management**
Project Period:	**10/13/2016 to 3/30/2018**
Date Submitted:	**2/20/2018**
Date Approved:	**[April 2018]**

Preventing Aquatic Trash

Contact Information

Grant Rite Management for North Hudson Sewerage Authority

P.O. Box 343, Syracuse, NY 13211

taloi@grantrite.com/315-506-8268

This is an New England Interstate Water Pollution Control Commission [NEIWPCC] funded project

NEIWPCC Final Report Form February 2017

This project was funded by an agreement awarded by the United States Environmental Protection Agency to the New England Interstate Water Pollution Control Commission (NEIWPCC) in partnership with the **North Hudson Sewerage Authority.**

Although the information in this document may have been funded wholly or in part by the United States Environmental Protection Agency (under agreement **EPA 196275701)** it has not undergone the Agency's publications review process and therefore, may not necessarily reflect the views of the Agency and no official endorsement should be inferred. The viewpoints expressed here do not necessarily represent those of the North Hudson Sewerage Authority, NEIWPCC, or EPA, nor does mention of trade names, commercial products, or causes constitute endorsement or recommendation for use.

Executive Summary

Preventing Aquatic Trash (PAT) was initiated by the North Hudson Sewerage Authority in response to reports of high amounts of micro-particles of plastic in the North Hudson River. The Authority undertook the project as one of a series of remediation efforts designed to mitigate pollution in the North Hudson River.

Grant funding was used purchase face plates for catch basins along streets in NHSA service areas of Hoboken, Union City, and West New York, NJ. Cover plates were installed through a contract with CH2MHill for maintenance of storm water systems, paid for by the applicant, and used as a match to grant funding. Face covers were designed to minimize the amount of plastic gaining entry to the waterway through street runoff collection systems.

A total of 250 face plate covers were ordered, purchased, installed and tested in 2017 and the first six weeks of 2018. Collection of trash caught by the new covers kept plastic trash from entering show a positive result, however, collection of trash from the plate covers was limited by a lack of significant rainfall events. Two rainfall events of .5” or more occurred during the testing phase, one on 1/12/2018 resulting in 0.5” of rain, and one on 2/7/2018 resulting in .84” of rain. NHSA finds that further collections of trash after significant rainfall events are needed to make a positive determination of the full effect of this project on the North Hudson River.

Table of Contents

Page

Contents

1 Project Synopsis

NHSA proposed to utilize EPA funding in an effort to mitigate plastic pollution in the waterways of northern New Jersey following the NY-NJ Harbor Estuary Plastic Collection Report published by NY/NJ Baykeeper in February 2016. This report shows findings of >256,000 plastic particles per square kilometer in estuaries in an area stretching from the Tappan Zee Bridge, along the lower Hudson River, south to Sandy Hook Bay, New Jersey. The report notes that plastic pollution often goes unnoticed because water bottles, plastic bags, and other large pieces of plastic quickly break down into smaller particles. (report accessed online at: http://nynjbaykeeper.org/wp-content/uploads/2016/02/NYNJBaykeeper-Plastics-Report-February-2016.compressed-1.pdf)

NHSA proposed to utilize $48,125 in EPA funding passed through NEIWPCC to mitigate the volume of large plastic pieces entering the North Hudson River by purchasing curb faceplates for installation on 250 catch basins that allow storm water runoff to the North Hudson River in densely populated high trash areas in Hoboken, West New York, and Union City, NJ. The proposed catch basins would be used to reduce the amount of plastic entering the North Hudson River by limiting the size of particles capable of flowing through catch basins to 1.5” in thickness.

NHSA proposed to provide $26,225 in match to the EPA funding by providing labor and oversight costs for the project. Tasks to be completed include: measure existing catch basins to ensure correct manufacture of new faceplate covers, price and order manufacture of 250 faceplate covers to meet specifications at a reasonable cost, install the new faceplate covers, collection of trash both pre-and post-faceplate cover installation, and oversight of the project. Information about manufacture, specifications, and installation of the faceplate covers is provided in this report as Appendix A.

NHSA proposed to collect trash after rain events at 10 catch basins in high traffic areas, allow the trash to dry, and measure the weight of plastic collected as a means of projecting the amount of change in plastic entering the North Hudson River during rain events.

2 Tasks Completed

During the timetable of the grant period NHSA measured existing catch basins, priced and ordered 250 catch basins faceplate covers as Environmental Retrofit Solutions (ERS) for installation, installed new faceplate covers, made 4 collections of trash for measurement, and provided oversight to the Preventing Aquatic Trash project. Trash collections were limited to significant rain events totaling 0.5” or more after an initial collection attempt on 10/24/2017 following .34” of rain resulted in 0 collections.

Further evaluation of the efficacy of the faceplates is possible if funding for the collection process is obtained. The catch basins where faceplates have been installed received regular cleaning through street sweeping (each street is swept on a cyclical basis when the streets are clear of snow, an average of 6 times per year), and through snow removal approximately 2 times per year.

NHSA is providing photographs that show a sample catch basin before installation of the faceplate cover, a faceplate cover being installed, an installed faceplate cover, and collected trash being weighed; maps of each township where faceplate covers were installed that shows locations of each faceplate cover; a map of catch basins used for collection of trash for testing, and a list of street locations for the 250 faceplate covers installed

Typical catch basin prior to installation

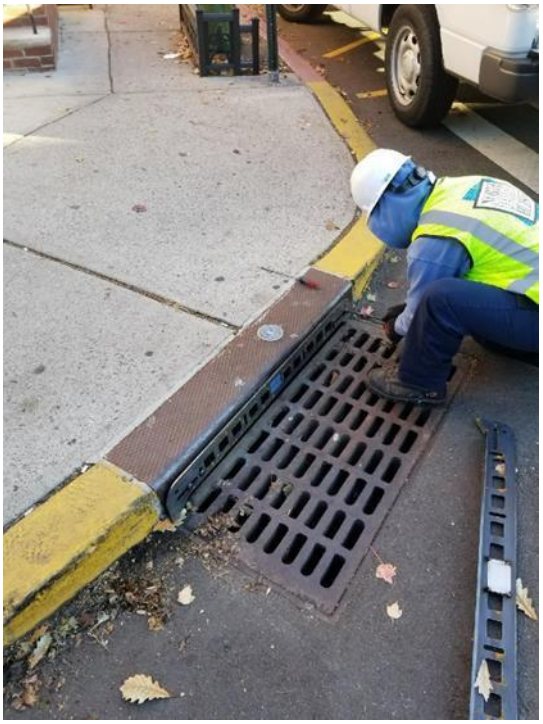

Faceplate cover being installed by CH2MHill

Installed faceplate cover

Collected trash being weighed after drying

ERS Sample Locations in relation to the Lincoln Tunnel and the North Hudson River

ERS Installations Union City, NJ

ERS Installs Hoboken, NJ

ERS installs for West New York

List of ERS Locations by address and date of installation:

Date	City	Address	Locations	Number of Units
9/28/2017	UC	New York & 33rd (test location)	NE	1
9/28/2017	UC	Palisades & 38th (test location)	SE	1
9/28/2017	UC	Palisades & 39th (test location)	SW	1
9/28/2017	UC	Hudson & 38th (test location)	SW	1
9/28/2017	UC	Hudson & 39th (test location)	SW,NW	2
9/28/2017	UC	Palisades & 23rd (test location)	NW	1
9/28/2017	UC	Palisades & 21st (test location)	NW	1
9/28/2017	UC	Palisades & 27th (test location)	SW	1
9/28/2017	UC	Palisades & 25th (test location)	SW	1
9/28/2017	UC	Palisades & 37th	SW	1
9/28/2017	WNY	Jefferson & 61st	NW, SE	2
9/28/2017	WNY	Jefferson & 62nd	NW, SE	2
9/28/2017	WNY	Jackson & 66th	NE, NW	2
10/2/2017	WNY	Madison & 64th	NE, NW	2
10/2/2017	WNY	Bergenline & 55th	NE	1
10/2/2017	WNY	Newark & Clinton	NE	1
10/11/2017	WNY	6219 Adams	E,W	2
10/11/2017	WNY	6149 Bergenline	W	1
10/11/2017	WNY	601 65th	N	1
10/18/2017	WNY	Broadway & 54th	NW, SW	2
10/18/2017	WNY	Broadway & 61st	SE	1
10/19/2017	WNY	Palisades & 56th	NW, SW	2
10/19/2017	HOB	Hudson & 12th	NW, SW	2
10/19/2017	HOB	Garden & 8th	SE	1
10/19/2017	HOB	Garden & 5th	SE, SW	2
10/19/2017	HOB	Willow & 10th	NW, NE, SE, SW	4
10/19/2017	HOB	Willow & 4th	NE, SE	2
11/15/2017	HOB	Madison & 14th	E	1
11/15/2017	HOB	Madison & 15th	E	1
11/15/2017	HOB	Jefferson & 15th	SE, SW	2
11/15/2017	HOB	Jefferson & 13th	NW, SW	2
11/15/2017	HOB	Jefferson & 12th	NE, NW, SW,	3
11/15/2017	HOB	Jefferson & 11th	NE< NW, SE	3

Date	City	Address	Locations	Number of Units
11/15/2017	HOB	Jefferson & 10th	SW	1
11/15/2017	HOB	Jefferson & 9th	NE, SE, SW	3
11/27/2017	HOB	Jefferson & 8th	NE, SE, NW, SW	4
11/27/2017	HOB	Adams & 8th	NE, NW, SE	3
11/27/2017	HOB	Grand & 9th	N, SE	2
11/27/2017	HOB	Grand & 8th	NE< NW, SE, SW	4
11/27/2017	HOB	Grand & 7th	NW	1
11/27/2017	HOB	Clinton& 8th	NW	1
11/27/2017	HOB	Clinton & 9th	NE< NW, SE, SW	4
11/30/2017	HOB	Clinton & 10th	NE, NW, SE, SW	4
11/30/2017	HOB	Clinton & 11th	NE, NW, SE, SW	
11/30/2017	HOB	Clinton & 12th	NE, SE, SW	3
12/1/2017	HOB	Willow & 9th	NE, NW, SE, SW	4
12/1/2017	HOB	Willow & 8th	NE, NW, SE, SW	4
12/1/2017	HOB	Willow Terrace	SW	1
12/4/2017	HOB	Willow & 4th	SW	1
12/4/2017	HOB	Willow & 3rd	NW	1
12/4/2017	HOB	Willow & 2nd	NE, NW, SE, SW	4
12/4/2017	HOB	Willow & Newark	NE, NW, SE, SW	4
12/4/2017	HOB	Park & 5th	South	1
12/4/2017	HOB	Hudson & 2nd	NW	1
12/4/2017	HOB	Hudson & 1st	NE, NW	2
12/4/2017	HOB	Clinton & 16th	NE	1
12/4/2017	HOB	Willow & 16th	SW	1
12/4/2017	HOB	Willow & 15th	SW	1
12/4/2017	HOB	1313 Willow	East	1
12/4/2017	HOB	1315 Willow	West	1
12/5/2017	HOB	Sinatra & 5th	E,W	2
12/5/2017	HOB	Sinatra & 6th	E,W	2
12/5/2017	HOB	Sinatra & 7th	E,W	2
12/5/2017	HOB	Sinatra & 8th	W, N, S	3
12/5/2017	HOB	Sinatra & 10th	S, W	2
12/5/2017	HOB	Jefferson & 16th	SE	1
12/5/2017	HOB	Washington & 15th	SW	1
12/5/2017	WNY	Bergenline & 60th	NW	1
12/5/2017	WNY	Bergenline & 56th	SE	1

Date	City	Address	Locations	Number of Units
12/5/2017	WNY	Bergenline & 54th	NE	1
12/5/2017	WNY	Bergenline & 50th	NE, SE	2
12/5/2017	UC	Bergenline & 32nd	NE	1
12/5/2017	UC	Bergenline & 26th	SW	1
12/5/2017	UC	Bergenline & 21st	NW	1
12/5/2017	UC	Bergenline & 20th	SE	1
12/5/2017	UC	Bergenline & 19th	NW, SE, SW	3
12/7/2017	UC	Palisades & 28th	SW	1
12/7/2017	UC	Palisades & 26th	SW	1
12/7/2017	UC	Palisades & Dodd	SW	1
12/7/2017	UC	Palisades & 24th	SW	1
12/7/2017	UC	Palisades & Shippen	SE	1
12/7/2017	UC	Palisades & 23rd	SW	1
12/7/2017	UC	Palisades & Maple	SW	1
12/7/2017	UC	Palisades & 33rd	N, S	2
12/7/2017	UC	Palisades & 31st	NW	1
12/7/2017	UC	Palisades & 31st	NW	1
12/7/2017	UC	Bergenline & 30th	SW	1
12/7/2017	UC	Palisades & 20th	NW, E, SW	6
12/7/2017	UC	Palisades & 19th	NE, NW, SE	3
12/7/2017	UC	Palisades & 18th	NW, SW	2
12/7/2017	UC	Palisades & 7th	SE, NW, SW	3
12/8/2017	UC	Palisades & 6th	NW, SW	2
12/8/2017	UC	Palisades & 2nd	E, W	2
12/8/2017	UC	West & 12th	SW	1
12/18/2017	UC	Pleasant & 33rd	SE	1
12/18/2017	WNY	Kennedy & 65th	SE	1
12/18/2017	WNY	6303 Jackson	West	1
12/18/2017	WNY	6118 Jackson	East	1
12/18/2017	WNY	6119 Jackson	West	1
12/18/2017	WNY	6120 Jefferson	East	1
12/18/2017	WNY	416 62nd	North	1
12/18/2017	UC	3802 Park	SE	1
12/18/2017	UC	40th & Park	SW	1
12/18/2017	WNY	53rd & Park	NW	1
12/18/2017	WNY	56th & Park	SW	1
12/18/2017	WNY	Broadway & 58th	SW	1
12/19/2017				

Date	City	Address	Locations	Number of Units
12/19/2017	WNY	Broadway & 67th	SW	`1
12/19/2017	WNY	139 67th	South	1
12/19/2017	WNY	138 67th	North	1
12/19/2017	UC	New York & 32nd	NW	1
12/19/2017	UC	Bergenline & 29th	NW, NE, SE, SW	4
12/19/2017	UC	Bergenline & 28th	NW	1
12/19/2017	UC	Bergenline & 25th	NW, SE	2
12/19/2017	UC	Bergenline & 24th	SE	1
12/19/2017	UC	Bergenline & 23rd	NW, SE, SW	3
12/19/2017	UC	Paterson Pink & 6th	SE	1
12/19/2017	UC	1208 Morris	East	1
12/19/2017	UC	Morris & 13th	NW	1
12/19/2017	UC	Central & 23rd	SE, SW	2
12/19/2017	UC	Central & 24th	SW	1
12/19/2017	UC	Central & 26th	NW	1
12/19/2017	UC	Adams & 26th	SW	1
12/19/2017	UC	Central & 31st	NE	1
12/19/2017	UC	831 Sipp	N,S	2
12/19/2017	UC	Palisades & 46th	SE, SW	2
12/19/2017	UC	Roosevelt & Pal	NE, SE	2
12/19/2017	UC	Palisades & 45th	NW, NE	2
12/19/2017	UC	Parkview & Highwood	SW	1
12/20/2017	UC	Park & Jefferson	NE	1
12/20/2017	UC	3500 Park	East	1
12/20/2017	Weeh	Sterling & Jefferson	NE	1
12/20/2017	Weeh	Denning & Hauxhurst	SE	1
12/20/2017	UC	89 Kingswood	South	1
12/20/2017	Weeh	Fulton & Potter	SE	1
12/20/2017	Weeh	51 Fairview	NW	1
12/20/2017	WNY	5200 Park	West	1
12/20/2017	WNY	5804 Park	East	1
12/20/2017	WNY	6215 Bergenline	West	1
12/20/2017	WNY	6218 Madison	East	1
12/20/2017	WNY	6219 Madison	West	1
12/20/2017	WNY	Bergenline & 67th	NW	1
12/20/2017	WNY	Dewey & 65th	SE	1
12/20/2017	WNY	6215 Hudson	West	1

Date	City	Address	Locations	Number of Units
12/20/2017	WNY	Park & 64th	NE	1
12/20/2017	WNY	Westerly & 61st	SW	1
12/20/2017	WNY	6102 Highland	East	1
12/20/2017	WNY	6103 Highland	West	1
12/20/2017	WNY	6102 Monitor	East	1
12/20/2017	WNY	6103 Monitor	West	1
12/20/2017	WNY	Buchanan & 62nd	North	1
12/20/2017	WNY	6046 Park	East	1
12/20/2017	WNY	Westover & Buchanan	SE	1
12/20/2017	WNY	228 60th	North	1
12/21/2017	WNY	226 60th	South	1
12/21/2017	HOB	333 River St	NE	1
12/21/2017	HOB	631 Gregory	SE	1
12/21/2017	Weeh	Gregory & Highpoint	NW	1
12/21/2017	Weeh	Kerrigan & 21st	NW, NE, SW	3
12/21/2017	UC	River & 3rd	East	1
12/22/2017	UC	Kerrigan & 23rd	NW, NE, SE, SW	4
12/22/2017	UC	Kerrigan & 24th	SE, SW	2
12/22/2017	WNY	Polk & 52nd	NW	1
12/22/2017	WNY	574 54th	South	1
12/22/2017	WNY	Polk & 53rd	East	1
12/22/2017	WNY	Hamilton & Blvd E	East, West	2
12/22/2017	Weeh	Park Ave to 31st	East, West	11

Methodology

Purchase of 250 curb faceplate covers occurred as projected. The items were manufactured for the PAT project by the Campbell Foundry Company at the proposed cost of $175 each. The Foundry worked with Environmental Retrofit Solutions (ERS) who designed the faceplates to meet Phase II of the EPA storm-water control act that requires curb openings to prevent larger floatables from entering municipal storm-water systems. The designed faceplate covers (as illustrated in Appendix A) include an integral snow plow brake and 8-point cam anchor curb connection system to provide product longevity.

Specifications for installed Face Plate covers:

Faceplate covers for this project were manufactured by the Campbell Foundry in two heights (6” and 8”) and a variety of widths, to accommodate existing drain catchment systems in the New Jersey communities of Union City, Weehawken, and West New York. Face Plate covers were ordered to measurements specified by CH2MHill designed to be fastened in place against the existing drain catchment with cam locks. Further information regarding manufacture and installation can be requested from:
Campbell Foundry
800 Bergen St., Harrison, NJ, 07029
Phone: 973-483-5480
FAX: 973-483-1843

A full description of the installed Face Plate covers including specifications for each type installed, the process of installation, and materials needed is located in Appendix A at the end of this report.

Installation of 250 curb faceplate covers occurred as projected between 9/28/2017 and 12/22/2017. Installations of faceplate covers was conducted by NHSA Maintenance employees as part of their usual maintenance rounds.

Effectiveness of the faceplate covers installed on catch basins was determined through a pre-test post-test method. 2.5% (10) of the 250 installed faceplate covers were pre-tested by collecting accumulated trash before installation after two significant rainfall events: .65” on 5/22/2017, and 1.45” on 7/7/2017 which resulted in zero trash collected. Post-testing was conducted after two significant rain events: 65” on 5/22/2017, and 1.45” on 7/7/2017 resulting in the collection of 23.6 ounces of plastic trash.

Preventing Aquatic Trash Final Report

Collected Data:

NHSA Preventing Aquatic Trash (PAT) Project Pre-Post Test Data: EPA grant # I96275701								
Collection site	**Staff Name**	**Pre-test dates**		**weight collected**	**Post-test Dates**		**Plastic items collected**	**Total Post Weight Collected in ounces**
	Philip Reeve	5/21/2017	7/6/2017	**by ounce**	1/12/2018 - rainfall 0.5"	2/7/2018 - rainfall 0.84"		
New York & 33rd	Philip Reeve	0	0	0	1.3 oz	0	several plastic bottles and other small items	1.3
Palisades & 38th	Philip Reeve	0	0	0	0	0	0	0
Palisades & 39th	Philip Reeve	0	0	0	0	0	0	0
Hudson & 38th	Philip Reeve	0	0	0	0.9 oz	0	plastic bottle and chip bag	0.9
Hudson & 39th	Philip Reeve	0	0	0	0	0	0	0
Hudson & 39th	Philip Reeve	0	0	0	0	0	0	0
Palisades & 23rd	Philip Reeve	0	0	0	0	0.6 oz	water bottle and plastic bag	0.6
Palisades & 21st	Philip reeve	0	0	0	9.2 oz	1.2 oz	1) multiple items in a bag 2) plastic food container and beverage bottle	10.4
Palisades & 27th	Philip reeve	0	0	0	0	3.0 oz	plastic utensil, beverage bottle, plastic bag	10.4
Plastic collectedPalisades & 25th	Philip reeve	0	0	0	0	0		0
								23.6

3 Quality Assurance Tasks Completed

Tasks completed as required by the approved QAPP included:

- Staff roles and responsibilities:
  - Frederic Pocci, NHSA Engineer, acted to oversee the project and consultants, and served as Project Manager.
  - Consultant Philip Reeve of CH2MHill acted as the Assistant Project Director, provided oversight on ordering of curb faceplate covers, and provided training to NHSA maintenance staff regarding installation of faceplate covers.
  - Consultant Thomas Aloi of Grant Rite Management provided oversight of grant expenditures, assembly of reports and other grant documentation, submitted quarterly and final project reports, helped finalize and distribute the QAPP plan.

- Quality Assurance/Data Collection/Assessment:
  - Thomas Aloi of Grant Rite Management provided oversight of data collection and completion of required reports.
  - NHSA maintenance staff performed trash collections at dedicated sites before installation and after rain events. Trash collected at each site was bagged and labelled to ensure separation for weight measurement.
  - Philip Reeve obtained the collected and bagged trash from NHSA maintenance staff, transported it to the drying are, dried, separated, and documented type of trash, weighed and tracked weight for each collection.
  - An excel spreadsheet was kept for data collection and is included at the end of this report.

Compliance Issues:

- NHSA experienced one compliance issue in meeting grant application specifications due to weather. The PAT team was not able to collect trash as per the original timeline. An extension of one-month time was requested and granted by Drew Youngs with NEIWPCC. A significant rainfall occurred in early February of 2018 that allowed for the final scheduled trash collection.

4 Deliverables Completed

Deliverable 1: order of, purchase of, and installation of 250 curb faceplate covers on basins in high trash volume areas was completed on 12/22/2018. A list of faceplate sites of completed installations is included in this report in the previous section Tasks Completed.

Deliverable 2: Trash was collected both pre-and post-installation of curb faceplate covers. The final collection of trash was delayed by weather events and was completed on 2/7/2018. An Excel spreadsheet is attached to this report that contains measures of trash collected.

Deliverable 3: NHSA filed four quarterly reports regarding progress of the Preventing Aquatic Trash project in January, April, October, and December of 2017, followed by this final grant report.

5 Conclusions

Grant funding provided through this opportunity purchased equipment designed to help minimize plastic waste infiltration to the North Hudson River that started as waste lost or dumped on streets. NHSA learned that the initial proposal for installation of catch basin cover plates was overly ambitious, many of the actions proposed took longer than planned: 1) manufacture of the cover plates was slower than estimated and the manufacturer charged a higher price than estimated; 2) installation of the cover plates was delayed due to manufacturing delays; and finally 3) collection of plastic debris to determine effectiveness of the cover plates was delayed due to delays listed above followed by lack of significant rainfall during the grant period. NHSA requested, and was granted, an additional 6 weeks of time to finalize collections of waste for measure.

Half of the proposed collection sites yielded plastic trash during post installation collections scheduled after significant rainfall. A total of six individual collections were made yielding plastic bottles, eating utensils, and bags with a total dry weight of 23.6 ounces [see photo of collected plastic trash provided under Tasks Completed and data regarding the collected plastic trash included in this report under Methodology]. Simple extrapolation shows that trash was likely to have been collected by 30% of the cover plates during each rainfall. [3 out of 10 collection sites offered positive collection of plastic trash for each of 2 collection dates] The collected trash averaged 4 ounces in weight for each site where collection occurred. Therefore, the installation of 250 cover plates May have kept 300 ounces (18.75 pounds) of plastic trash from entering the waterway during each rainfall (250 cover plates x 30% x 4 oz = 300 ounces of plastic garbage), however, given the small collection sample (2%) of installed covers, enough data was not collected to inform a statistical conclusion.
Potential future collections of plastic trash would need to be done following significant rainfall to fully determine the effectiveness of the catch basin cover plates.

6 References

February 2016 NY/NJ Baykeeper study, done in partnership with scientists from Rutgers University and the State University of New York. http://nynjbaykeeper.org/wpcontent/uploads/2016/02/NYNJBaykeeper-Plastics-Report-February-2016-2.pdf

7 Appendices

Campbell Foundry Company is pleased to announce that we've teamed up with **Environmental Retrofit Solutions (ERS)** to provide the best catch basin curb opening retrofit solution available in the market today.

Phase II of the USEPA Stormwater Control Act requires that curb openings be modified to prevent larger floatables from entering Municipal Stormwater Systems.

SUPERIOR DESIGN

ERS curb faceplates are a clearly superior, engineered solution.

- ✓ Integral Snow Plow brake.
- ✓ 8 point cam anchor curb connection system.
- ✓ Zero failure in over 3 full years of installed units on New Jersey roads

We have worked with ERS to ensure the Curb Faceplate will easily retrofit all curbs which Campbell Foundry has been supplying the New Jersey market since 1921.

After 2 years of rigorous testing and approval, ERS Curb Faceplates are used in most New Jersey counties as well as on Long Island and beyond the Tri-State area.

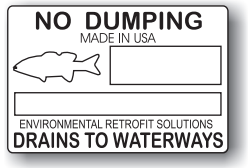

2" x 3"
Embossed Stainless Steel Plate
Welded in Place

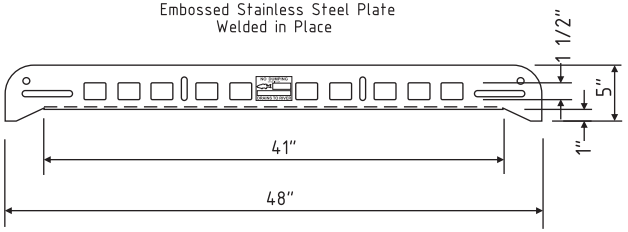

6" Curb Head Cover

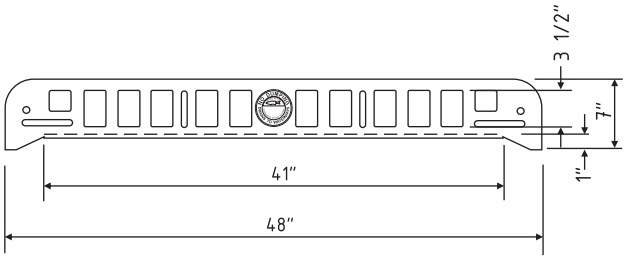

8" Curb Head Cover

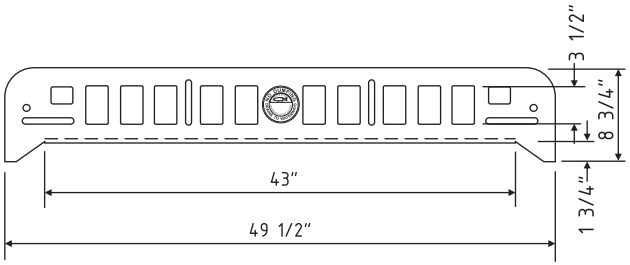

10" Curb Head Cover

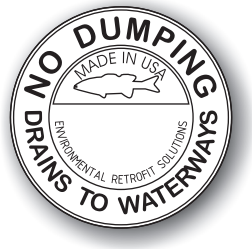

3" Diameter
Embossed Stainless Steel Plate
Welded in Place

SUPERIOR MATERIALS

ERS Curb Faceplates and the Four Cam anchor dual point curb connection are made from 1/4" thick COR-TEN Weathering Steel. This is a high strength/low alloy weathering steel conforming to ASTM A588

Mounting hardware includes allen wrench button head cap screws and cam clamps.

SUPERIOR MANUFACTURE

The ERS Curb Faceplate is manufactured in the U.S.A.. It is finished to remove sharp edges and burrs. The COR-TEN steel will oxidize to create it's own weather barrier. The weathered unit will match the patina of the original weathered curb.

MARKINGS

Per USEPA Phase II guidelines; the ERS Curb Faceplate also educates the public about the environmental damage of dumping into stormwater systems. A stainless steel badge marked: NO DUMPING

DRAINS TO WATERWAYS

is welded from behind into it's own recess and includes the fish symbol.

EASE OF INSTALLATION

The ERS Curb Type-S Faceplate installs easily and quickly. The cam action clamping device provides a quick and secure connection to the inside of the curb opening.

Specify the Best

There are other, inferior curb opening covers on the market. To get the best, you need to specify what makes the ***ERS Curb Faceplate*** the superior USEPA Stormwater Control Act Phase II Retrofit Solution.

- State Approved
- Burr free finish
- Cam action, 8 point clamping
- Snowplow brake
- Installs in minutes
- Optional tamper-proof ability
- Zero percent failure or fall-off
- Superior Design, Materials, and Manufacture
- Easy Installation
- Cost Effective

Contact Us Today!

CAMPBELL FOUNDRY COMPANY
800 Bergen Street
Harrison, New Jersey 07029
☎ **973-483-5480** 973-483-1843

Shipping and Storage Yard:

I-95 to Exit 15W, toward Newark/Kearny onto County Rd. 508, 1/4 mi. to yard on left;

Rt.280 west to Exit 16 toward Newark/Harrison onto County Rd. 508, 1/4 mi. to yard on left.

PRSRT STD
U.S. POSTAGE PAID
HARRISON, N.J.
PERMIT NO.

CAMPBELL FOUNDRY COMPANY
800 BERGEN STREET
HARRISON, NJ 07029

CAMPBELL FOUNDRY COMPANY

CAMPBELL FOUNDRY COMPANY and ERS PRODUCTS are Pleased to Present the USEPA PHASE II Curb Opening Retrofit SOLUTION

The ERS Curb Faceplate

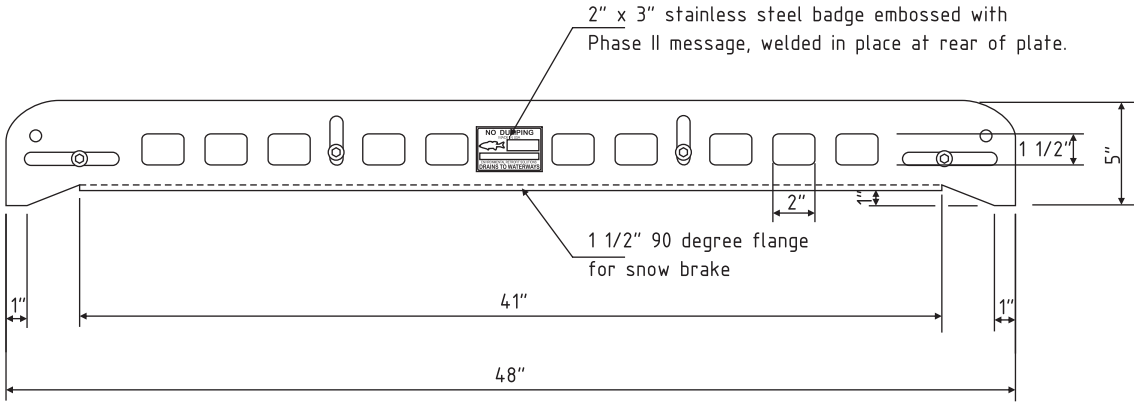

S-Series ERS Faceplate for 6" Curb Head
ERSS648

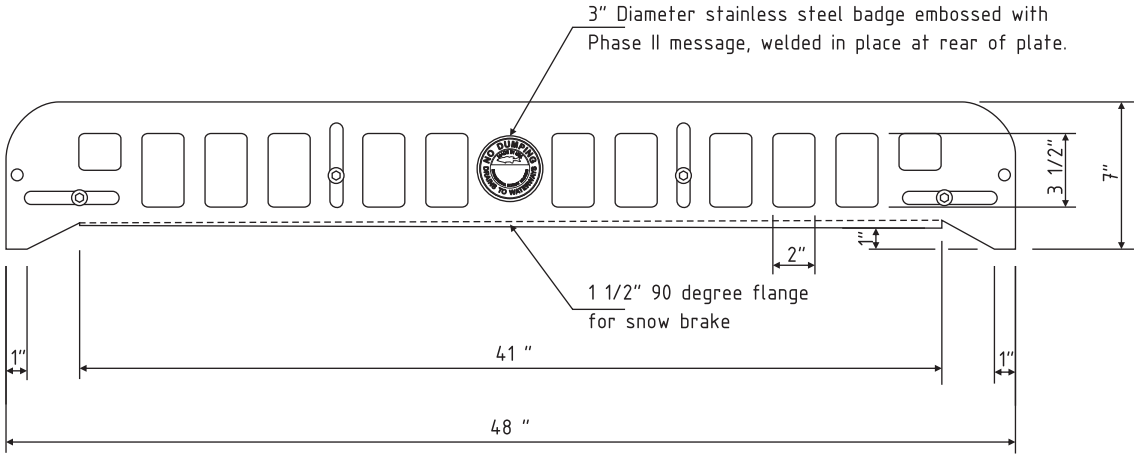

S-Series ERS Faceplate for 8" Curb Head
ERSS848

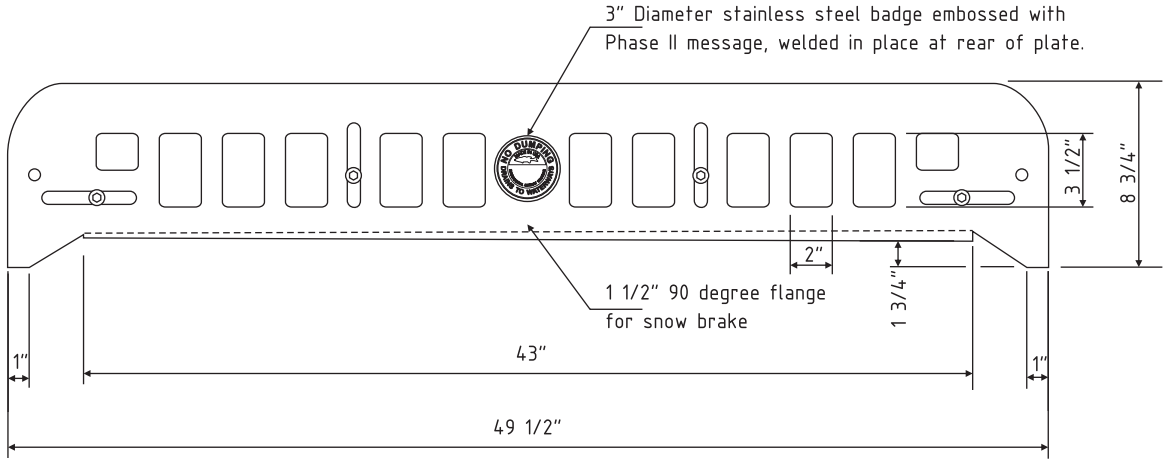

S-Series ERS Faceplate for 10" Curb Head
ERSS1048

All Faceplates can be modified
to fit existing Radius Curb Heads.

CAMPBELL FOUNDRY COMPANY
Harrison, N.J. 07029
Phone: 973-483-5480 FAX: 973-483-1843

ERS Faceplates

Campbell Foundry Company is pleased to announce that we've teamed up with **Environmental Retrofit Solutions (ERS)** to provide the best catch basin curb opening retrofit solution available in the market today.

Phase II of the USEPA Stormwater Control Act requires that curb openings be modified to prevent larger floatables from entering Municipal Stormwater Systems.

SUPERIOR DESIGN

ERS curb faceplates are a clearly superior, engineered solution.

✓ Integral Snow Plow brake.
✓ Secured with four Cam Action Clamps
✓ Zero percent failure or fall-off to date

We have worked with ERS to ensure the Curb Faceplate will easily retrofit all curbs which Campbell Foundry has been supplying the New Jersey market since 1921.

After 2 years of rigorous testing, ERS Curb Faceplates are used in most New Jersey counties as well as on Long Island and beyond the Tri-State area.

SUPERIOR MATERIALS

ERS Curb Faceplates and the four Cam Action Clamps are made from 1/4" thick COR-TEN Weathering Steel. This is a high strength/low alloy weathering steel conforming to ASTM A588. Mounting hardware includes allen wrench button head cap screws and Cam Action Clamps.

SUPERIOR MANUFACTURE

The ERS Curb Faceplate is manufactured in the U.S.A.. It is finished to remove sharp edges and burrs. The COR-TEN steel will oxidize to create it's own weather barrier. The weathered unit will match the patina of the original weathered curb.

Patent #7,128,495

MARKINGS

Per USEPA Phase II guidelines: the ERS Curb Faceplate also educates the public about the environmental damage of dumping into stormwater systems. A stainless steel badge marked: NO DUMPING
DRAINS TO WATERWAYS
is welded from behind into it's own recess and includes the fish symbol.

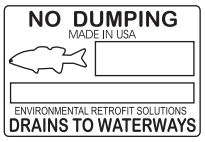

2" x 3"
Embossed Stainless Steel Plate
Welded in Place

3" Diameter
Embossed Stainless Steel Plate
Welded in Place

EASE OF INSTALLATION

The ERS Curb Type-S Faceplate installs easily and quickly. The Cam Action Clamps provide a quick and secure connection to the inside of the curb opening.

Specify the Best

There are other, inferior curb opening covers on the market. To get the best, you need to specify what makes the ***ERS Curb Faceplate*** the superior USEPA Stormwater Control Act Phase II Retrofit Solution.

- ☛ Burr free finish
- ☛ 8 point Cam Action Clamp connection
- ☛ Snowplow brake
- ☛ Installs in minutes
- ☛ Optional tamper-proof ability
- ☛ Zero percent failure or fall-off to date
- ☛ Superior Design, Materials, and Manufacture
- ☛ Easy Installation
- ☛ Cost Effective

CAMPBELL FOUNDRY COMPANY
Harrison, N.J. 07029
Phone: 973-483-5480 FAX: 973-483-1843

ERS Faceplates

ERSS636

S-Series ERS Grate Plate for 6” Curb

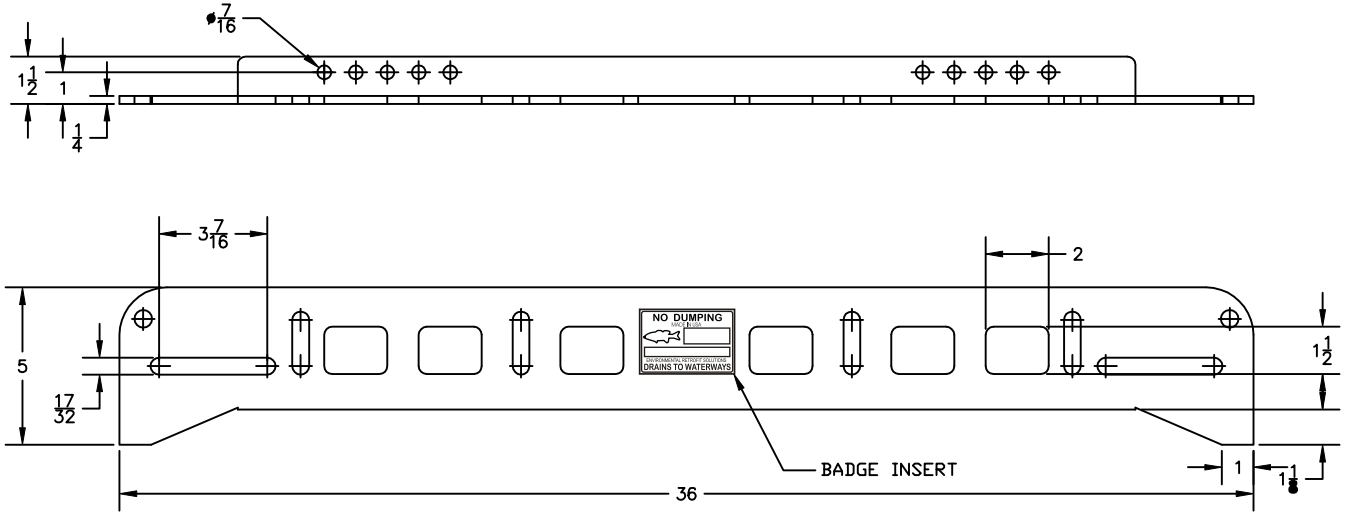

NOTES:

Retro steel plate and cam device manufactured from 0.25 inch thick ,Cor-ten brand, over 60,000 psi high strength/low alloy weathering steel, and conform to A588 grade.

Mounting bolts shall be of the button head cap configuration made of steel alloy, for example, 10-18 steel and shall conform in all respects to ASTM F835. Additional metal piece(s) shall be made of 10-18 steel alloy.

Manufacture:
Steel plate shall be of uniform quality, of holes, shapes and bends. No finish is required on Cor-ten steel. Material oxidizes to create it's own weather barrier.

Markings:
Each plate will have a stainless steel badge with blue background mechanically fastened to the center of the plate that reads:

NO DUMPING, DRAINS TO WATERWAYS
MADE IN USA & FISH SYMBOL

CAMPBELL - ERS
Harrison, N.J. 07029
Phone: 973-483-5480 FAX: 973-483-1843

SCALE:	APPROVED BY:	DRAWN BY: D.L.
DATE: 02/03/09		REV.:

S-Series ERS Grate Plate for 6” Curb

Pattern Number: ERSS636

ERSS648

S-Series ERS Grate Plate for 6” Curb Head

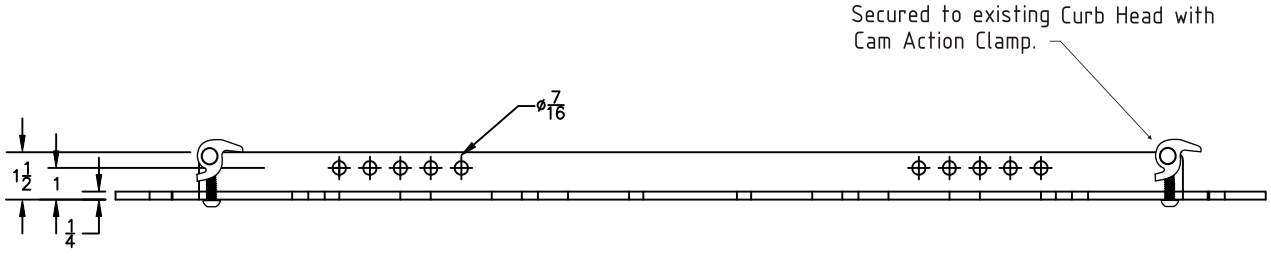

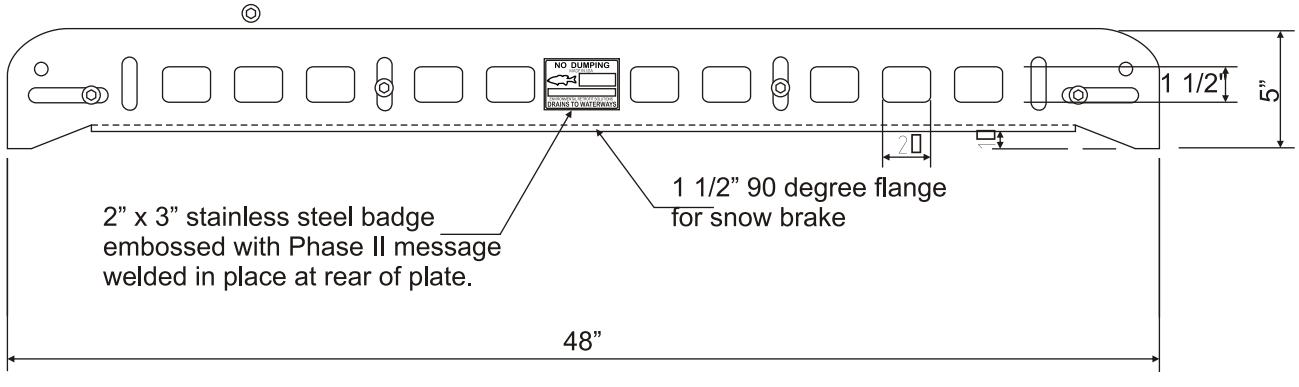

NOTES:

Retro steel plate and cam device manufactured from 0.25 inch thick ,Cor-ten brand, over 60,000 psi high strength/low alloy weathering steel, and conform to A588 grade.

Mounting bolts shall be of the button head cap configuration made of steel alloy, for example, 10-18 steel and shall conform in all respects to ASTM F835. Additional metal piece(s) shall be made of 10-18 steel alloy.

Manufacture:
Steel plate shall be of uniform quality, of holes, shapes and bends. No finish is required on Cor-ten steel. Material oxidizes to create it's own weather barrier.

Markings:
Each plate will have a stainless steel badge with blue background mechanically fastened to the center of the plate that reads:

NO DUMPING
DRAINS TO WATERWAYS
MADE IN USA & FISH SYMBOL

CAMPBELL - ERS
Harrison, N.J. 07029
Phone: 973-483-5480 FAX: 973-483-1843

SCALE:	APPROVED BY:	DRAWN BY: D.L.
DATE: 03/06/07		REV.:

S-Series ERS Grate Plate for 6” Curb Head

Pattern Number: ERSS648

S-Series ERS Grate Plate for 8” Curb

ERSS836

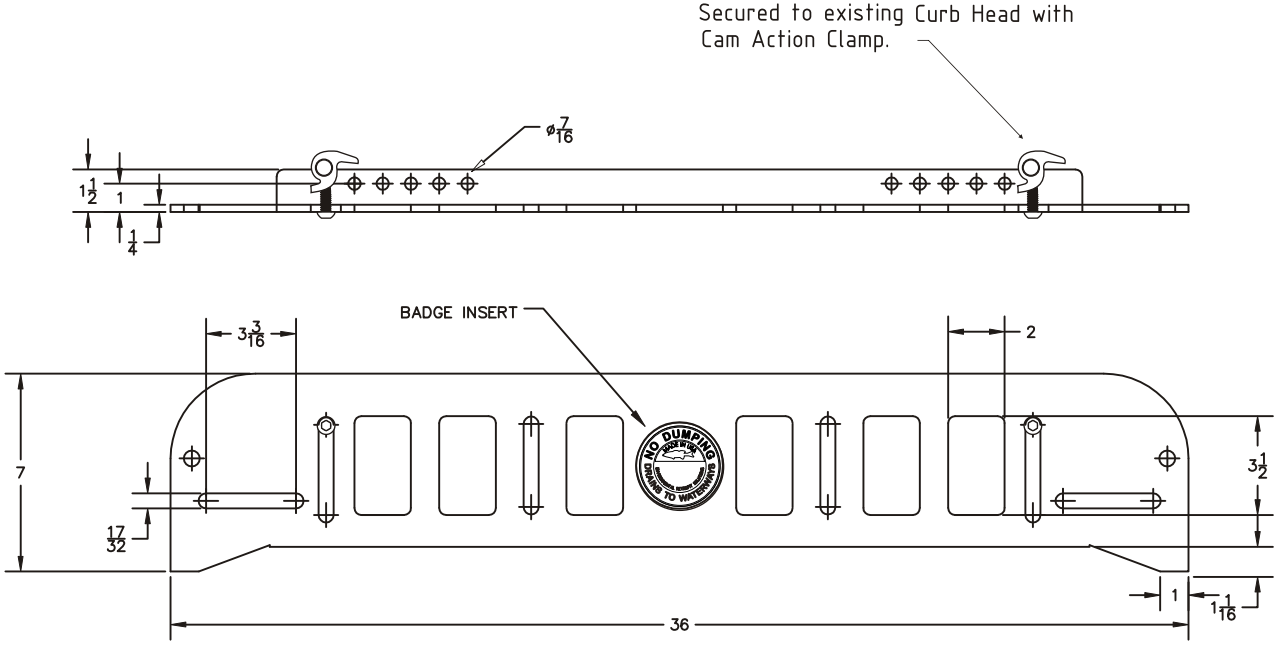

NOTES:

Retro steel plate and cam device manufactured from 0.25 inch thick ,Cor-ten brand, over 60,000 psi high strength/low alloy weathering steel, and conform to A588 grade.

Mounting bolts shall be of the button head cap configuration made of steel alloy, for example, 10-18 steel and shall conform in all respects to ASTM F835. Additional metal piece(s) shall be made of 10-18 steel alloy.

Manufacture:
Steel plate shall be of uniform quality, of holes, shapes and bends. No finish is required on Cor-ten steel. Material oxidizes to create it's own weather barrier.

Markings:
Each plate will have a stainless steel badge with blue background mechanically fastened to the center of the plate that reads:
NO DUMPING, DRAINS TO WATERWAYS
MADE IN USA & FISH SYMBOL

CAMPBELL - ERS
Harrison, N.J. 07029
Phone: 973-483-5480 FAX: 973-483-1843

SCALE:	APPROVED BY:	DRAWN BY: D.L.
DATE: 02/03/09		REV.:

S-Series ERS Grate Plate for 8” Curb

Pattern Number: ERSS836

ERSS848

S-Series ERS Grate Plate for 8” Curb Head

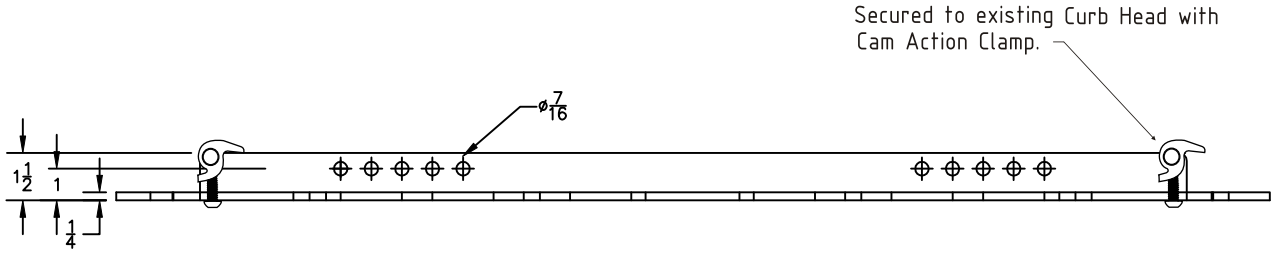

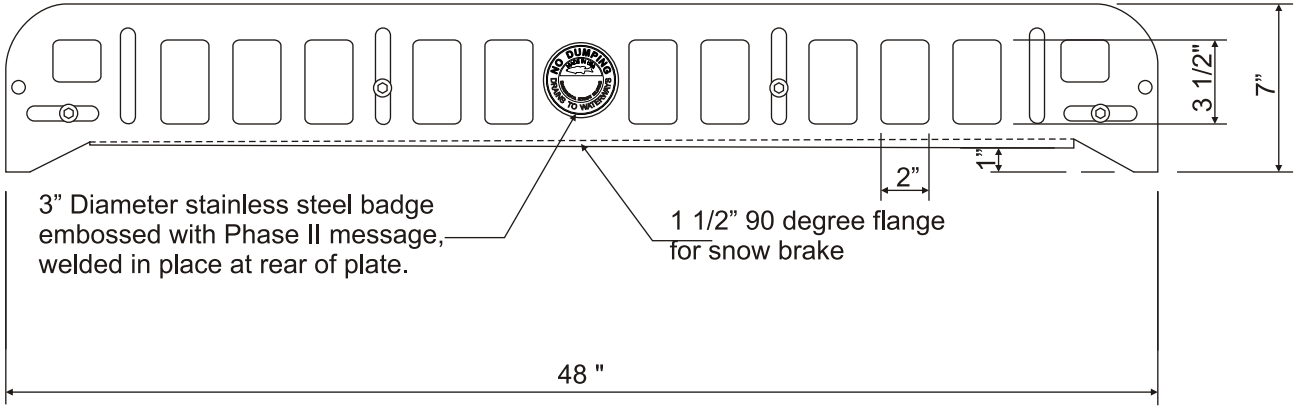

NOTES:

Retro steel plate and cam device manufactured from 0.25 inch thick ,Cor-ten brand, over 60,000 psi high strength/low alloy weathering steel, and conform to A588 grade.

Mounting bolts shall be of the button head cap configuration made of steel alloy, for example, 10-18 steel and shall conform in all respects to ASTM F835. Additional metal piece(s) shall be made of 10-18 steel alloy.

Manufacture:
Steel plate shall be of uniform quality, of holes, shapes and bends. No finish is required on Cor-ten steel. Material oxidizes to create it's own weather barrier.

Markings:
Each plate will have a stainless steel badge with blue background mechanically fastened to the center of the plate that reads:

NO DUMPING
DRAINS TO WATERWAYS
MADE IN USA & FISH SYMBOL

CAMPBELL - ERS
Harrison, N.J. 07029
Phone: 973-483-5480 FAX: 973-483-1843

SCALE:	APPROVED BY:	DRAWN BY: D.L.
DATE: 03/06/07		REV.:

S-Series ERS Grate Plate for 8” Curb Head

Pattern Number: ERSS848

ERSS1036

S-Series ERS Grate Plate for 10” Curb Head

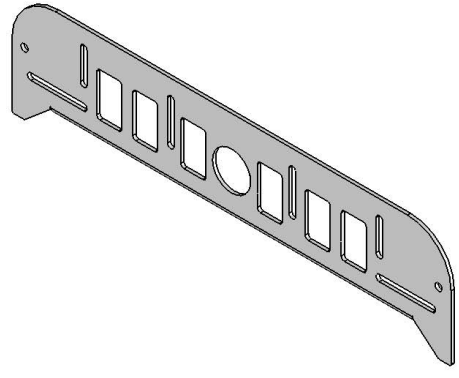

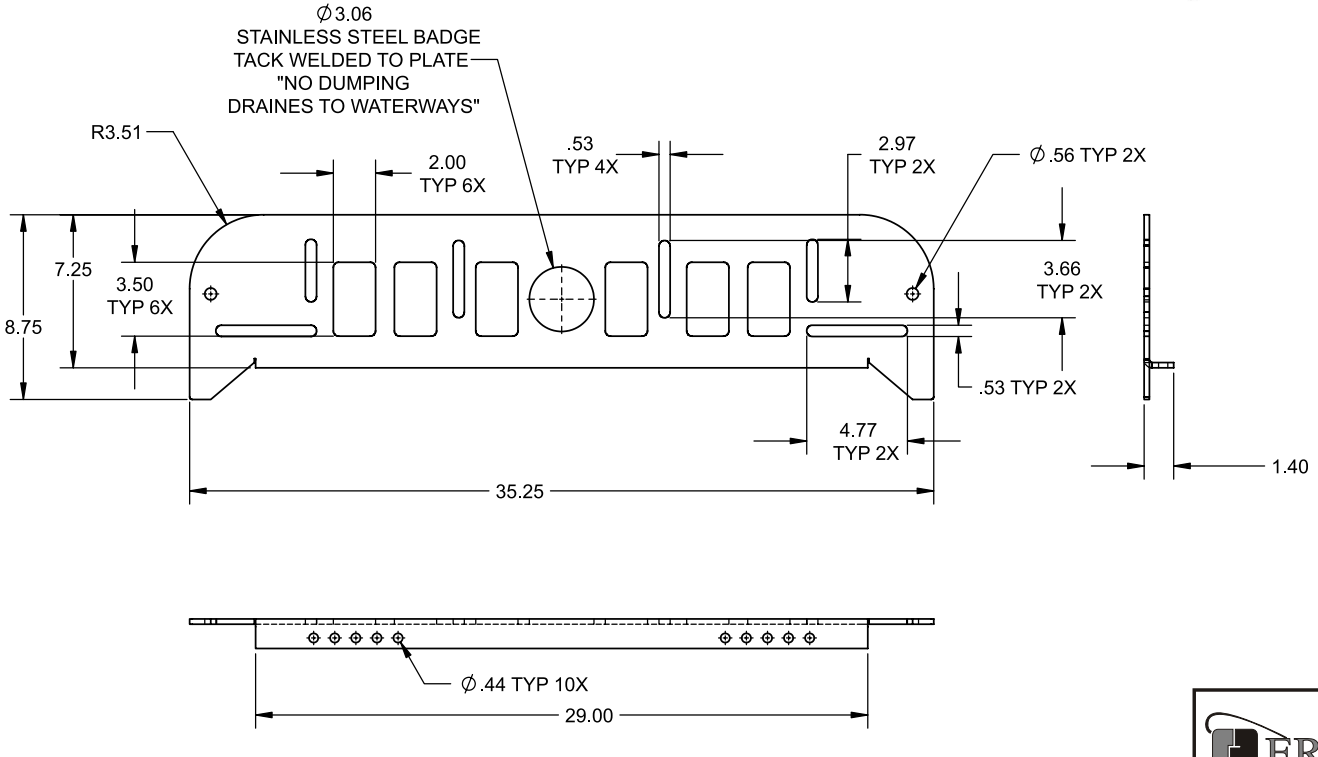

NOTES:

Retro steel plate and cam device manufactured from 0.25 inch thick ,Cor-ten brand, over 60,000 psi high strength/low alloy weathering steel, and conform to A588 grade.

Mounting bolts shall be of the button head cap configuration made of steel alloy, for example, 10-18 steel and shall conform in all respects to ASTM F835. Additional metal piece(s) shall be made of 10-18 steel alloy.

Manufacture:
Steel plate shall be of uniform quality, of holes, shapes and bends. No finish is required on Cor-ten steel. Material oxidizes to create it's own weather barrier.

Markings:
Each plate will have a stainless steel badge with blue background mechanically fastened to the center of the plate that reads:

NO DUMPING, DRAINS TO WATERWAYS
MADE IN USA & FISH SYMBOL

CAMPBELL - ERS
Harrison, N.J. 07029
Phone: 973-483-5480 FAX: 973-483-1843

SCALE:	APPROVED BY:	DRAWN BY:
DATE: 07/02/09		REV.:

S-Series ERS Grate Plate for 10” Curb Head

Pattern Number: ERSS1036

ERSS1048

S-Series ERS Grate Plate for 10” Curb Head

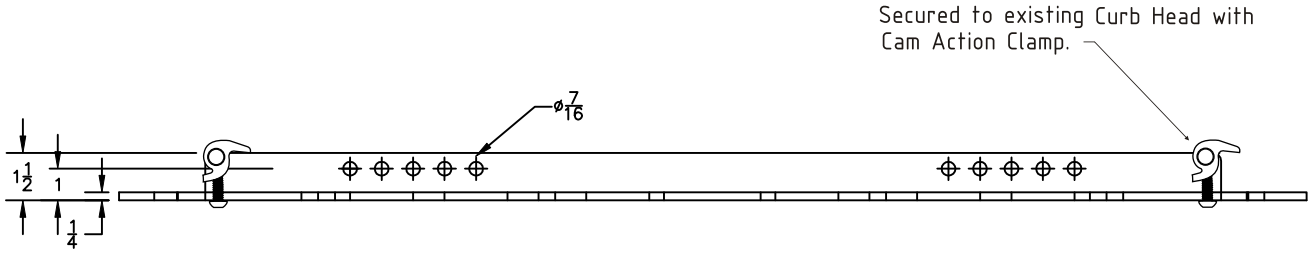

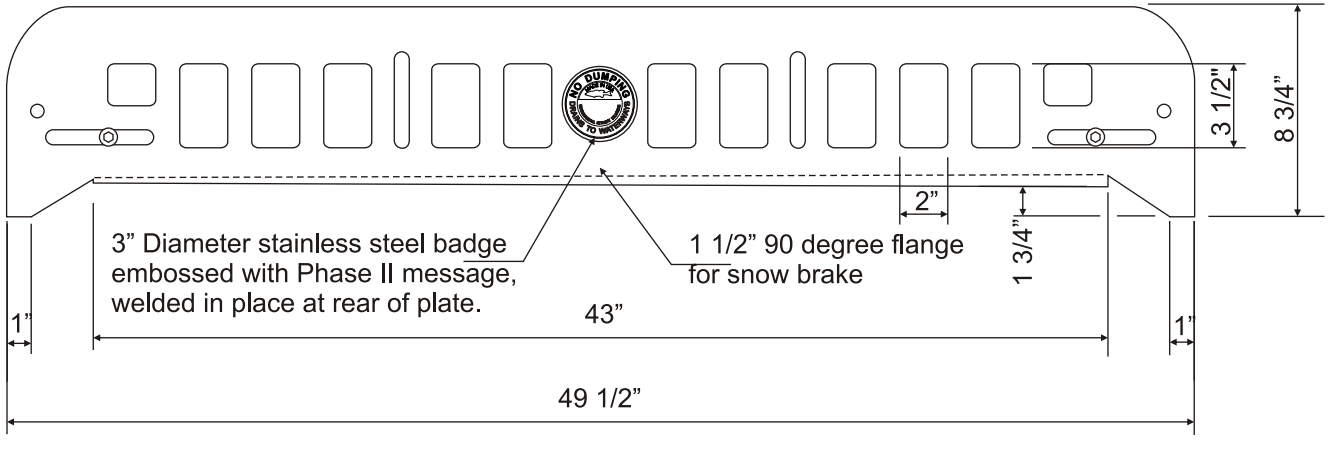

NOTES:

Retro steel plate and cam device manufactured from 0.25 inch thick ,Cor-ten brand, over 60,000 psi high strength/low alloy weathering steel, and conform to A588 grade.

Mounting bolts shall be of the button head cap configuration made of steel alloy, for example, 10-18 steel and shall conform in all respects to ASTM F835. Additional metal piece(s) shall be made of 10-18 steel alloy.

Manufacture:
Steel plate shall be of uniform quality, of holes, shapes and bends. No finish is required on Cor-ten steel. Material oxidizes to create it's own weather barrier.

Markings:
Each plate will have a stainless steel badge with blue background mechanically fastened to the center of the plate that reads:

NO DUMPING
DRAINS TO WATERWAYS
MADE IN USA & FISH SYMBOL

CAMPBELL - ERS
Harrison, N.J. 07029
Phone: 973-483-5480 FAX: 973-483-1843

SCALE:	APPROVED BY:	DRAWN BY: D.L.
DATE: 03/06/07		REV.:

S-Series ERS Grate Plate for 10” Curb Head

ERSS1048

New Technologies and Products U
QMS# 05-(

State of New Jersey

DEPARTMENT OF TRANSPORTATION
P.O.Box 600
Trenton, New Jersey 08625-0600

JON S. CORZINE
Governor

KRIS KOLLURI, Es
Commissioner

August 31, 2006

Environmental Retrofit Solutions
230 Warburton Ave.
Hawthorne, NJ 07506
Attn: Cliff Lill

Dear Mr. Lill:

The New Jersey Department of Transportation's New Technologies and Products Unit has completed its evaluation of your **Catch Basin Curb Box Cover Retrofit with cam action clamping system.**

Based on the results of our demonstration projects and from information obtained regarding performance from oth installations, NJDOT subject matter experts have determined that this product meets NJDOT's performance and design requirements, and is acceptable for use on NJDOT construction and maintenance projects.

A specifications revision request has been submitted to our Office of Maintenance Engineering and the Office of Configuration Management Unit for processing.

Please note: Should the NJDOT discover that the qualification testing or evaluation procedure for approvi this product, material or process was flawed, that in-service performance reveals unacceptable safety problems, that the product, material or process being marketed is significantly different from the version that was evaluate The NJDOT reserves the right to modify or revoke acceptance.

Please be advised that this letter may not be used for advertising or promotional purposes without the writt consent of the Commissioner of the New Jersey Department of Transportation.

Sincerely,

Angelo A. Mendola,
New Technologies and Products Init

FASTENING INSTALLATION INSTRUCTIONS

Fig. 1.

Cam Clamps

THE ORIGINAL STEEL RETROFIT INLET COVER

1. Center plate on curb box ensuring the stabilizing feet are flush with the ground/bottom of curb box.

2. Install adjustable bar to left side of plate (as you look at it) leaving 1/4” to 1/2” space between bar and edge of opening. Bar should be installed on opposite side that plow travels. *

3. Install four clamps and bolts in slots provided using horizontal slots for rectangular opening curb boxes and vertical slots for arched opening curb box.

4. Slide the Cam Clamps as far up the lip of the Catch Basin as they will go, as shown in Fig. 2.

5. Tighten the clamps to approx. 72 ft/lbs starting with the (2) center clamps, then the (2) end clamps.

Note: You may need to trim the stabilizing tabs at the bottom of the plate to fit some boxes.

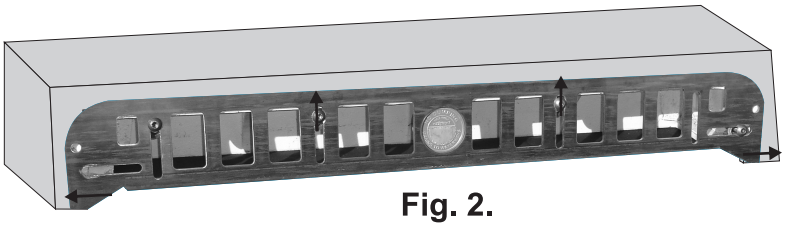

Fig. 2.

OPTIONAL SECURITY INSTALLATION INSTRUCTIONS

Step ‘A’

Install Security Plug into end of Insertion Tool

Step ‘B’

Ensure that dimpled end of plug is facing outward

Step ‘C’

Place Insertion Tool on bolt head

Step ‘D’

Impact Insertion Tool with mallet....

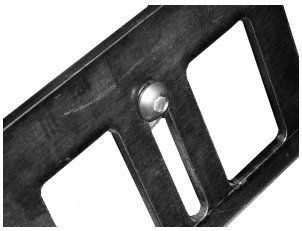

Step ‘E’

...until slug is securely expanded into bolt head.

* Loosen bolt on Patent Pending Snow Plow Brake.
Fit to opening size and secure (2) bolts on left side thru slide bar
Follow installation instructions.
*As shown in Fig. 1.

Flip bar for different dimensions

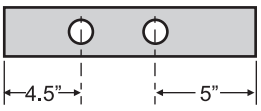

GRATE PLATE™

THE ORIGINAL STEEL RETROFIT INLET COVER

PATENT #7,128,495

973-483-5480 ***973-427-8055***

KEVIN KENERSON
V.P. Sales & Marketing

e-mail: kkenerson@ersproductsusa.com
sales@campbellfoundry.com
www.ersproductsusa.com

Catch Basin Cover Assembly Specification

General: *NJDOT APPROVED*

This specification is for a catch basin opening cover assembly system. It should comprise a covering plate member having a sufficient number of openings of predetermined area and dimension so as to comply with existing state regulations and/or specifications; and, a plurality of mount openings available to secure the cover to the basin. The cover member will be available in a multitude of contours and opening configurations so as to meet the aforementioned specification and to provide sufficient cover for the variety of catch basin openings to be found in the field.

Further, the assembly shall include means for clamping the covering member to the catch basin which provide a firm and secure attachment. The means for clamping preferably shall include a cam action device for each mount opening. The cam device is to be mounted to the cover member using a single bolt through each mount opening. The cam device will pivot on the interior surface of the cover member in response to the advance of the securing bolt. The cam device will have at least two contact prongs that eventually contact the interior surface of the catch basin as the bolt is advanced so as to provide two points of pressure against the interior surface of the basin for each cam device to secure the covering member to the basin.

The bolt shall be applied using 75 ± 5 ft-lbs of torque and shall be rendered tamper proof at the completion of the installation. The snow plow brake is a 90 degree, 1.5 “flange that was created for ridged strength and durability. It is placed at the bottom portion of each plate to provide a stopping point on the inside of the casting. This is patent pending item. The cover assembly system of Environmental Retrofit Solutions, LLC or its approved equivalent shall be comprised of a retro steel cover plate and associated parts which are manufactured in the United States of America. All manufacturers shall be approved suppliers and be able to demonstrate that there is an acceptable quality control program in place at the producing manufacturer prior to supplying product.

Materials:

Retro steel plate and cam device shall be manufactured from 0.25 inch thick ,Cor-ten brand, over 60,000 psi high strength/low alloy weathering steel, and conform to A588 grade. Using a computer engineered designed formula, at 51,000 psi yield point; it will take 1011 lbs of force to reach the yield point of the material. It will deflect a distance of .531 inches.

Mounting bolts shall be of the button head cap configuration made of steel alloy, for example, 10-18 steel and shall conform in all respects to ASTM F835.

Additional metal piece(s) shall be made of 10-18 steel alloy.

Manufacture:

Retro steel plate shall be of uniform quality, of holes, shapes and bends. Plate shall be reasonably smooth of surface and edge. Plate dimensional tolerance shall be +/-

1/32 inch per foot. No finish is required on Cor-ten steel. Material oxidizes to create it's own weather barrier.

Inspection:

Quality inspection of part geometry by manufacturer.

Certification:

To be furnished to the purchaser upon request.

Markings:

Each plate will have a stainless steel badge with blue back ground mechanically fastened to the center of the plate that reads: NO DUMPING, DRAINS TO WATERWAY, MADE IN USA & FISH SYMBOL

Sampling:

Purchaser may conduct random checks of steel plate.

Environmental Retrofit Solutions, LLC. tele: 973-427-8055 fax: 973-427-8022
PATENT NO. 7,128,495 B1